GREANEY
Quality Precast Concrete

33.25"x8.75"x15.75" Flue Gatherer

Greaney Concrete Products Ltd,
Stokesfield, Shanagolden, Co. Limerick, Ireland

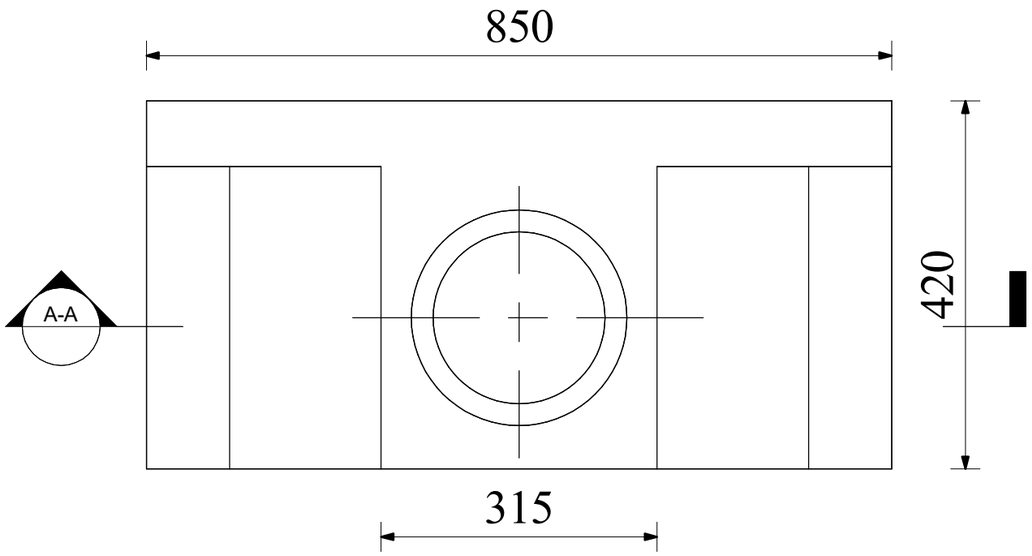

TOP PLAN
1 : 10

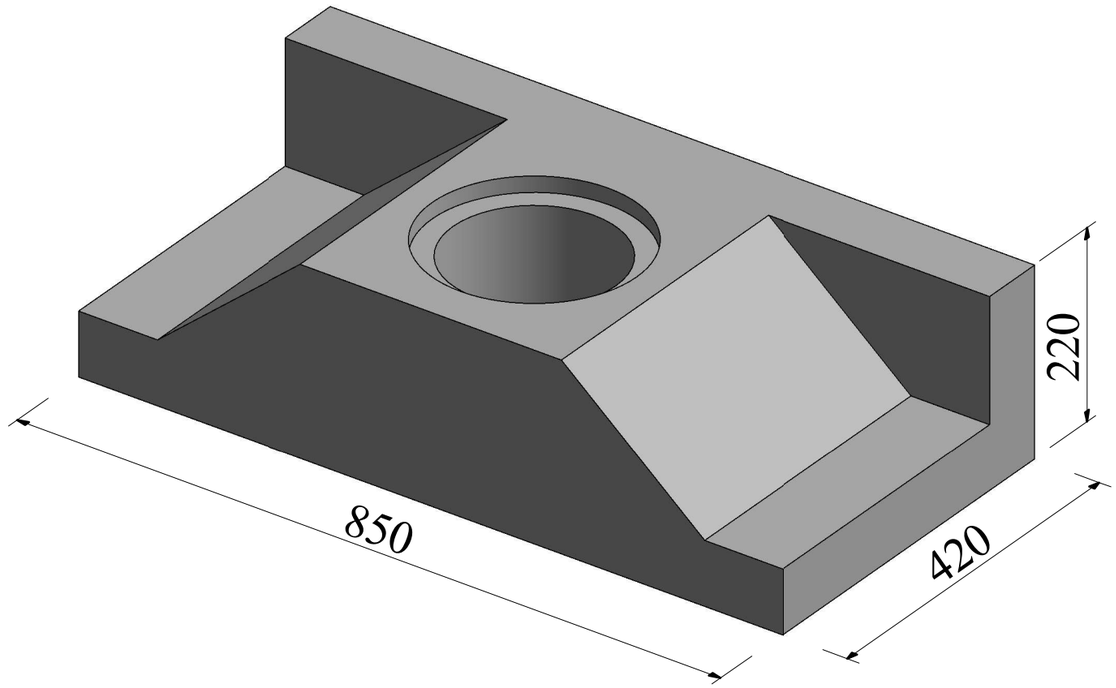

3D VIEW

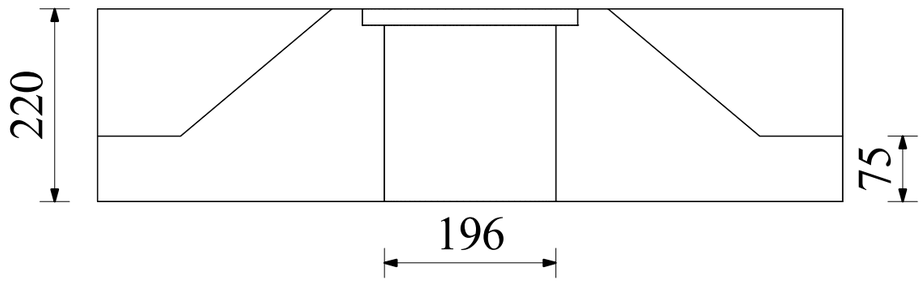

SECTION A-A
1 : 10

PRODUCT CODE	CYFG		LEGEND		ITEM NO.	CAST IN PARTS	QTY
QUANTITY	1	Nos.	mf	MOULD FACE			
CONCRETE MIX			nf	NEAR FACE			
MIX - VOLUME	0.053	M³					
WEIGHT	0.133	Tons					
Fcu @ 28 DAYS		Mpa					
Fcu @ DEMOULDING		Mpa					
CONCRETE COVER		mm					
STEEL GRADE		Mpa					

REV. NO.	DESCRIPTION	DRAWN	DATE	APPROVED
A	ISSUE FOR APPROVAL	SPK	24/06/24	A.M

Tel : + 353 069 65388
E.Mail : info@greaneyconcrete.ie
Web : www. greaneyconcrete.ie

PROJECT:			
Greaney Concrete Products Ltd			
DRAWING TITLE: 33.25"x8.75"x15.75" Flue Gatherer			
DRAWN: SPK	CHECKED: -	DESIGNED: -	APPROVED: A.M
SCALE: As Indicated	DRAWING NO. -		REV. MARK A